# UA1K-R

## 250Wrms DVB-T/1kW p-synk UHF Amplifier

UA1K-R is a full LD-MOS Broadcast Power Amplifier designed for both digital and analog applications. The unit is the state of the art in terms of easy assembly, reliability and performances. The complete unit can assure the compliance to all relevant international standards.

- **Full LD-MOS Power Amplifier**
- **1000Wps Out**
- **250Wrms Out DVB-T**
- **DTV (8 VSB): 500Wrms**
- **BroadBand (470-862 MHz)**
- **Designed for SKD sales**
- **Internal cabling free**
- **Easy maintenance without special tools**
- **RS232-RS485 interface**
- **Control software included**
- **Extremely strong mechanical structure**
- **Requires external PSU**

This picture is a mere example, it does not bind the provided product

**Electrical Data**

| | |
|---|---|
| **Voltage Supply** | 28-32 Vdc 30V nominal (recommended PSU = PS200-D) |
| **Power Consumption** | 2400W @1000W Ps Black Field @650MHz (typ.)<br>1600W @290Wrms DVB-T @650MHz (typ.) |
| **Current Consumption** | 87.5 A max @ 30 V analog application |
| **Operating Temperature** | 0 to +45 °C |
| **Humidity** | Up to 90% (non condensing) |
| **Gain Stability** | 0 to 45 deg. +/-0.5dB[1] |
| **Gain** | 56dB nom. ±2dB (fine ADJ available) |
| **Power Out (@1dB compression)** | Min. 1200W (Typ. 1400W) |
| **Input Return Loss** | Min. -16dB (Typ. -20dB) |
| **Output Return Loss** | Min. -18dB (Typ. –22dB) |
| **Load Mismatch (CW 1000W $F_0$ 860MHz VSWR=2:1) all phase angle** | No degradation |
| **$P_{out}$ Common Amplif.** | 1000W Ps IMD < -46dB Red Field (without precorrection) |
| **$P_{out}$ DVB-T** | 280Wrms max shoulder < -36dBc (with precorrection)<br>250Wrms nominal |
| **DTV (8 VSB)** | 500Wrms max |
| **$P_{out}$ PEP** | 1400W max IMD < -27 dBc |

**Mechanical data and Interfaces**

| | |
|---|---|
| **Dimensions** | 19” 3HU std 600mm depth[2] |
| **Weight** | 25 Kg. |
| **RF in** | N connector rear panel |
| **RF out** | 7/16” connector rear panel |
| **RF mon** | SMA connector rear panel |
| **RS232** | D 9 poles front and rear panel |
| **RS485** | D 9 poles rear panel |
| **Local Enable** | Switch front panel<br>Two-pole connector rear panel |

# UA1K-R

**External High Power Supply**
**Technical Specifications**

| | |
|---|---|
| **Vout** | 30Vdc |
| **Iout**<br>**Max operative current** | 2 x 50A or 1 x 100A in analog application<br>2 x 30A or 1 x 60A in digital application |
| **Current Limit** | 2 x 55A or 1 x 110A in analog application<br>2 x 35A or 1 x 70A in digital application |
| **Load Regulation** | +/- 0.5% from 10% up to 100% dinamic load change |
| **Output Ripple** | 400mV max |
| **Sense** | External Sense for both sections (if double). Sense Impedance 6.8 KΩ each positive/GND wire. |
| **Enable** | **UA1K-R** provides a signal 0/5V (0 = disable; 5 = enable). Open collector with internal pull-up. This signal must be used to enable the power supply. |

**External Service Power Supply**
**Technical Specifications**

| | |
|---|---|
| **Vout** | 5Vdc |
| **Iout** | 0.5A |
| **Load Regulation** | +/- 0.5% from 10% up to 100% static load change |
| **Output Ripple** | 50mV max |
| **Enable** | **This tension must be always enabled and connected** |

**Block Diagram**

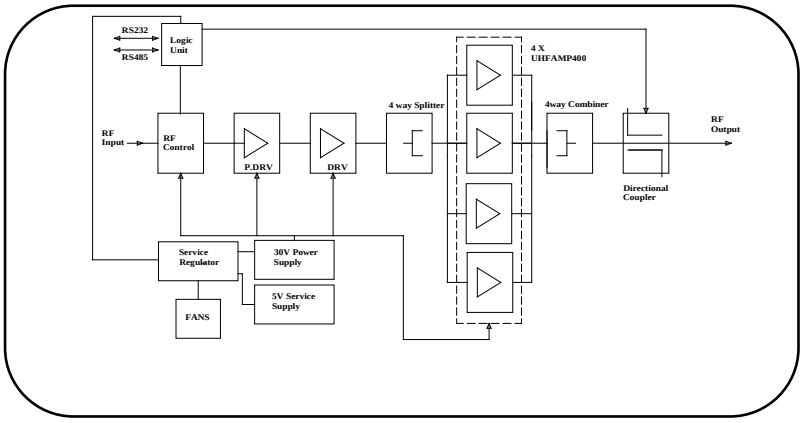

**Remote control**

| | |
|---|---|
| Enable[1] | RF Enable ON/Stand By |
| **GAIN (option)** | Gain setting |

**Readable data by remote computer or Control Logic Unit (through RS232/RS485)**

| STATUS/ALARMS | NOTES |
|---|---|
| **Enable** | ON/STAND BY |
| **RF Faults** | ACTIVE if Gain < 6dB referred to nominal |
| **°C max** | ACTIVE when RF Thermal Protection is ON |
| **Pin max** | ACTIVE when RF Overdrive Protection is ON |
| **VSWR max** | ACTIVE if VSWR max Protection is ON |
| **I max** | ACTIVE when Current is too high |
| **MEASUREMENTS** | |
| **RF in** | Input Power in mW (PS for analog, RMS for DVBT) |
| **RF out** | Output Power in W (PS for analog, RMS for DVBT) |
| **RF DRV** | RF Driver Output in W (PS for analog, RMS for DVBT) |
| **RF Heatsink Temperature** | Temperature in °C |
| **IDC Driver** | Value in A |
| **IDC Final Stage 1** | Value in A |
| **IDC Final Stage 2** | Value in A |
| **VDC** | PS Output Voltage |

**Self Protections**

| | |
|---|---|
| **RF Thermal Protection** | |
| **Overdrive** | Pin max must be set on the working channel with the used DVB-T or Analog signal |
| **VSWR max** | VSWR max must be set on the working channel with the used DVB-T or Analog signal |
| **I max** | |

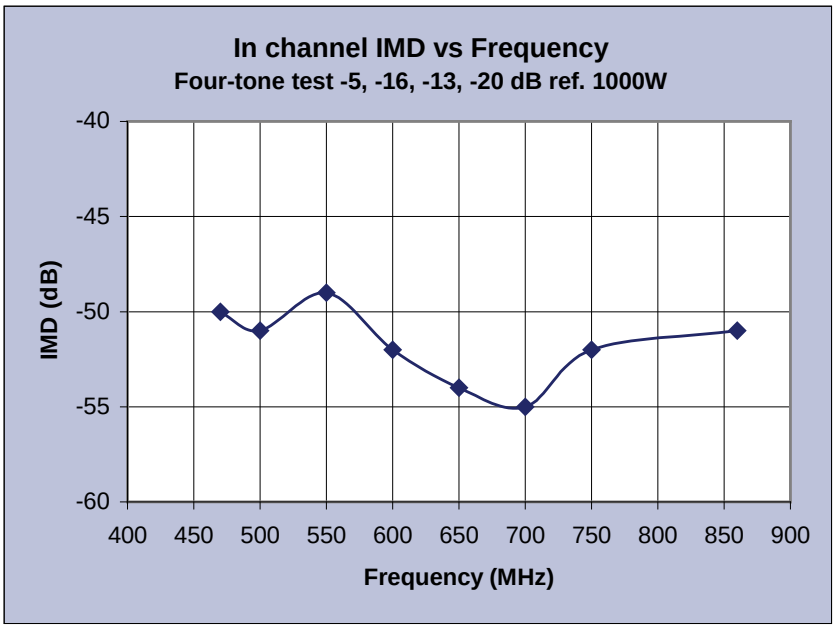


Without precorrection

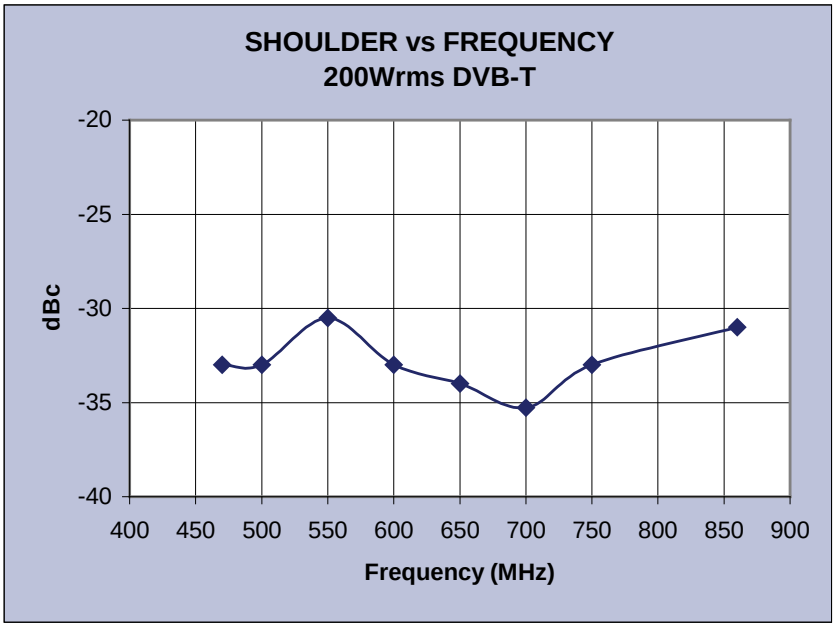

# UA1K-R

## Side View

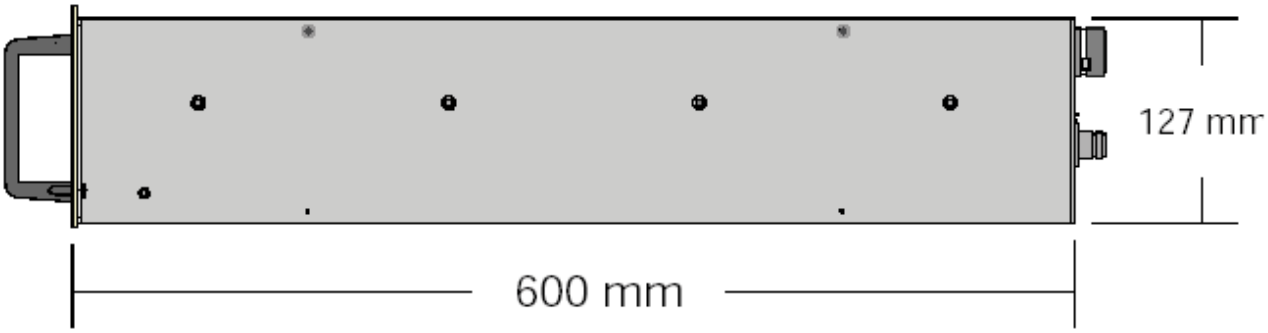


## Top View

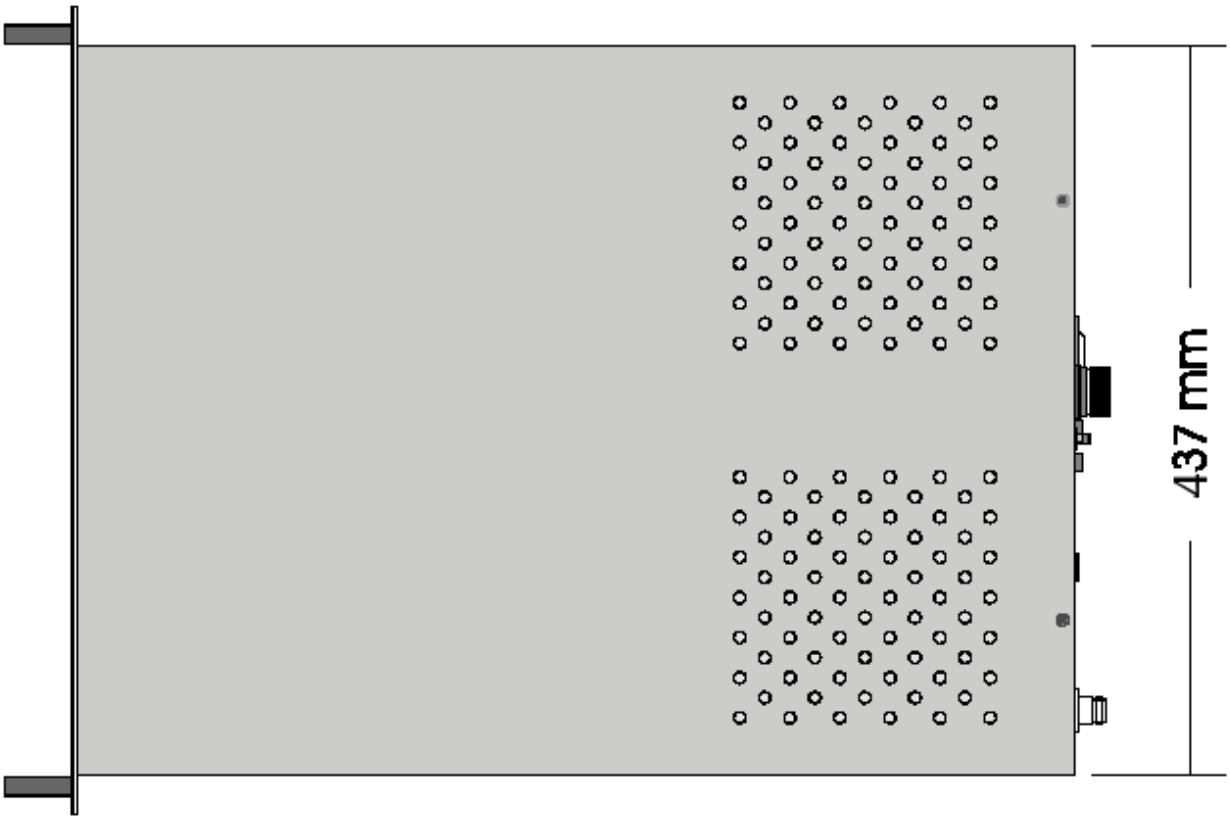

# UA1K-R

## Front Panel

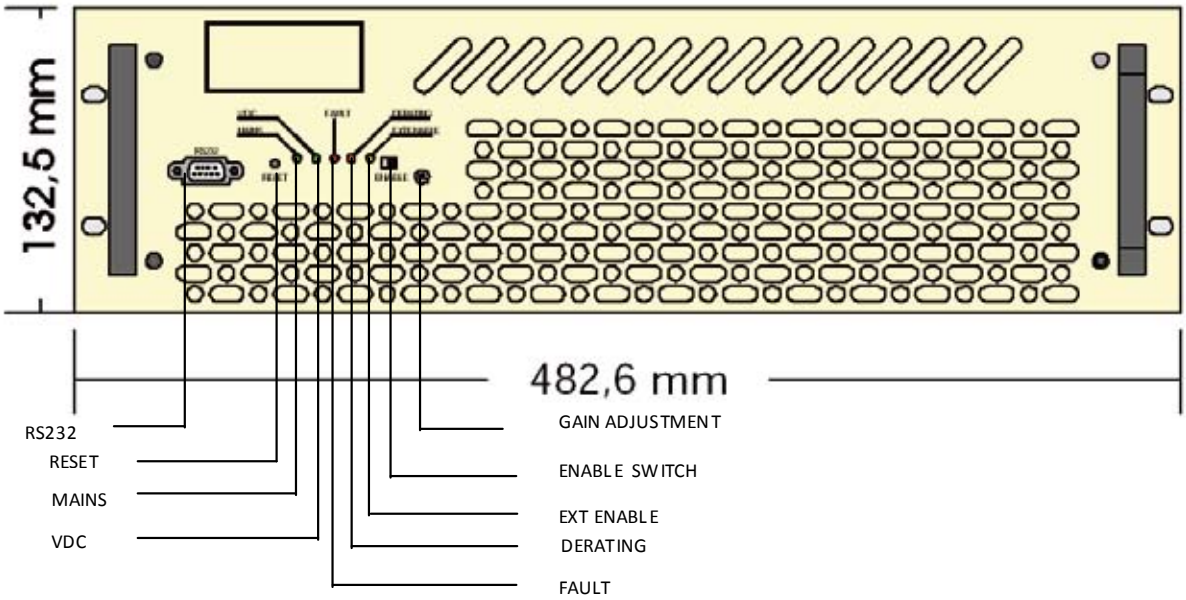


## Rear Panel

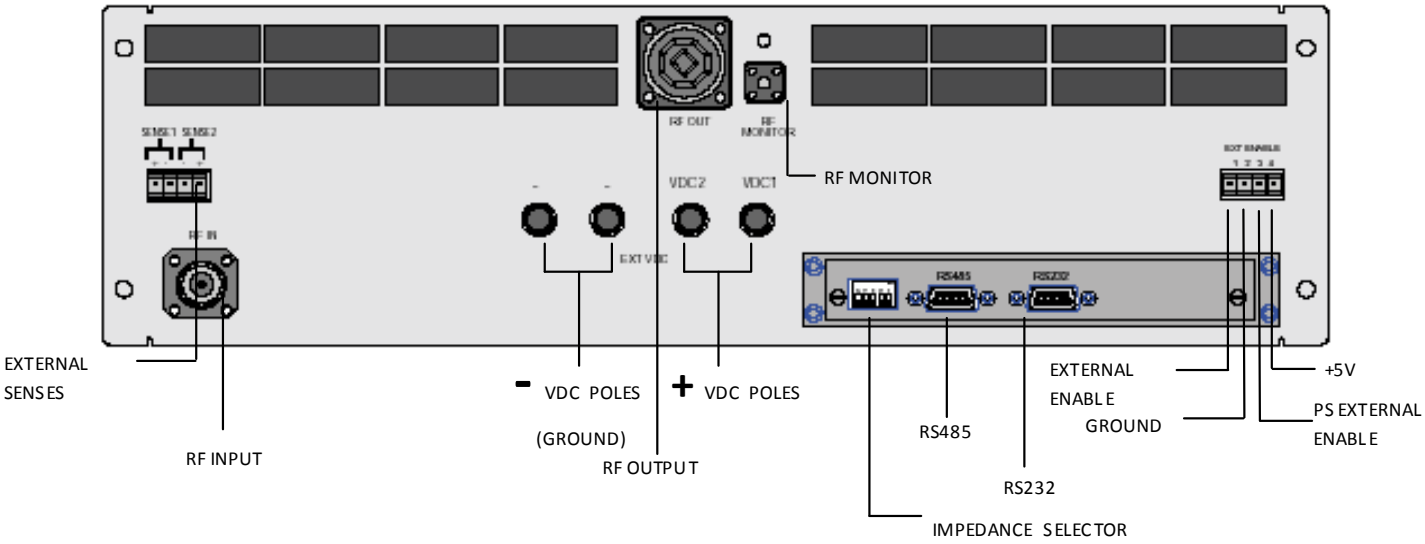

## IMPORTANT NOTICE

ONAIR RESERVE THE RIGHT TO MAKE CHANGES TO THE PRODUCT(S) OR INFORMATION CONTAINED HEREIN WITHOUT NOTICE. ONAIR ASSUMES NO RESPONSIBILITY FOR ANY ERRORS WHICH MAY APPEAR IN THIS DOCUMENT.

WARRANTY INFORMATION APPLICABLE TO THE PRODUCT IDENTIFIED HEREIN IS AVAILABLE UPON REQUEST. NOTHING CONTAINED HEREIN SHALL CONSTITUTE A WARRANTY, REPRESENTATION OR GUARANTEE OF ANY KIND. ONAIR EXPRESSLY DISCLAIMS ALL OTHER WARRANTIES, EXPRESS AND/OR IMPLIED INCLUDING BUT NOT LIMITED TO WARRANTIES OF MERCHANTABILITY, AND OF FITNESS FOR A PARTICULAR PURPOSE, USE OR APPLICATION.

No part of this document may be copied or reproduced in any form or by any means without the prior written consent of Onair.

## WARNING

ONAIR PRODUCTS ARE NOT INTENDED FOR USE IN LIFE SUPPORT APPLIANCES, DEVICES OR SYSTEMS. USE OF A ONAIR PRODUCT IN ANY SUCH APPLICATION WITHOUT WRITTEN CONSENT IS PROHIBITED.

Bostancı Yolu Cad. Keyap Çarşı Sitesi D-1 Blok No: 56 34775 Y.Dudullu - Ümraniye - İSTANBUL • Tel: 0(216) 540 70 45 • Faks: 0(216) 540 70 46 • E-mail: info@onair.com.tr